RKLE Teleskopkabine | Cabines télescopique | Telescopic screen cubicles

Montageanleitung | Instructions de montage | Installation instructions

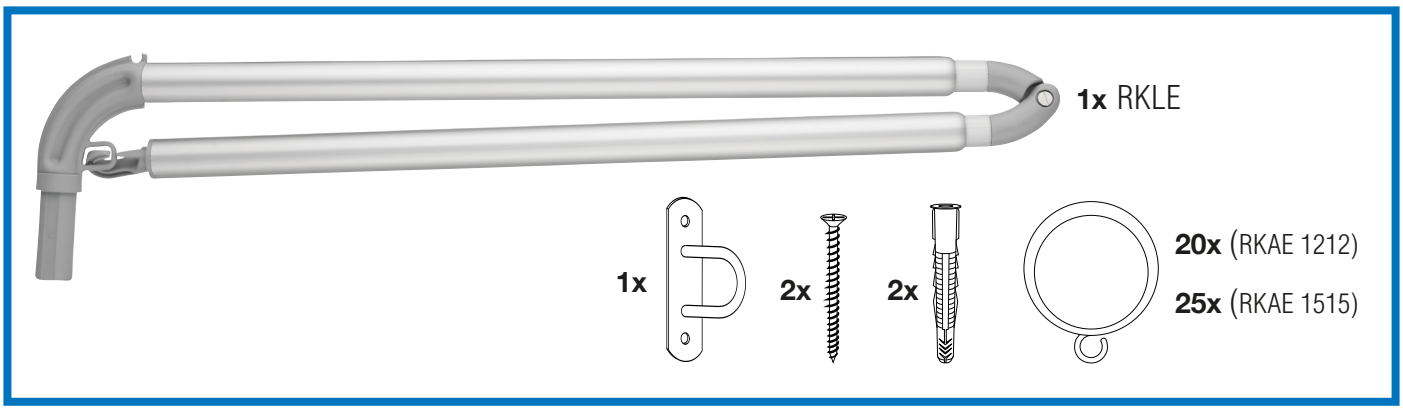

RKAE 1212: 120 cm
RKAE 1515: 150 cm

RKAE 1212: 115 cm
RKAE 1515: 145 cm

max. 200 cm

6 cm

Ø 8 mm

WH 95

4x

WH, WH/F

max. 190 cm

Distributed by
puras
031 996 85 85
puras.ch

Montageanleitung | Instructions de montage | Installation instructions

WH 95

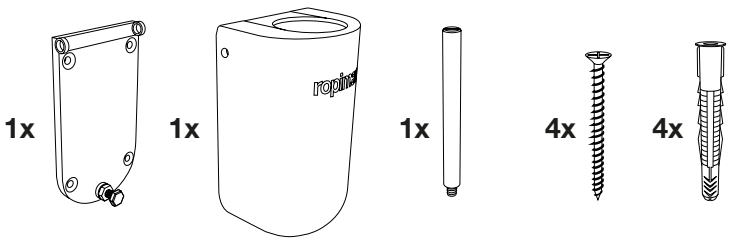

WH

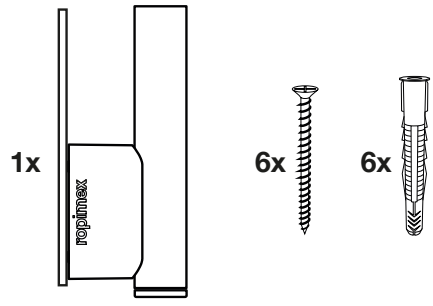

WH/F

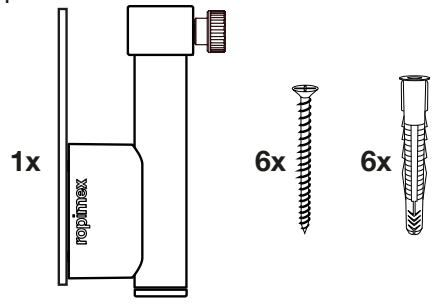

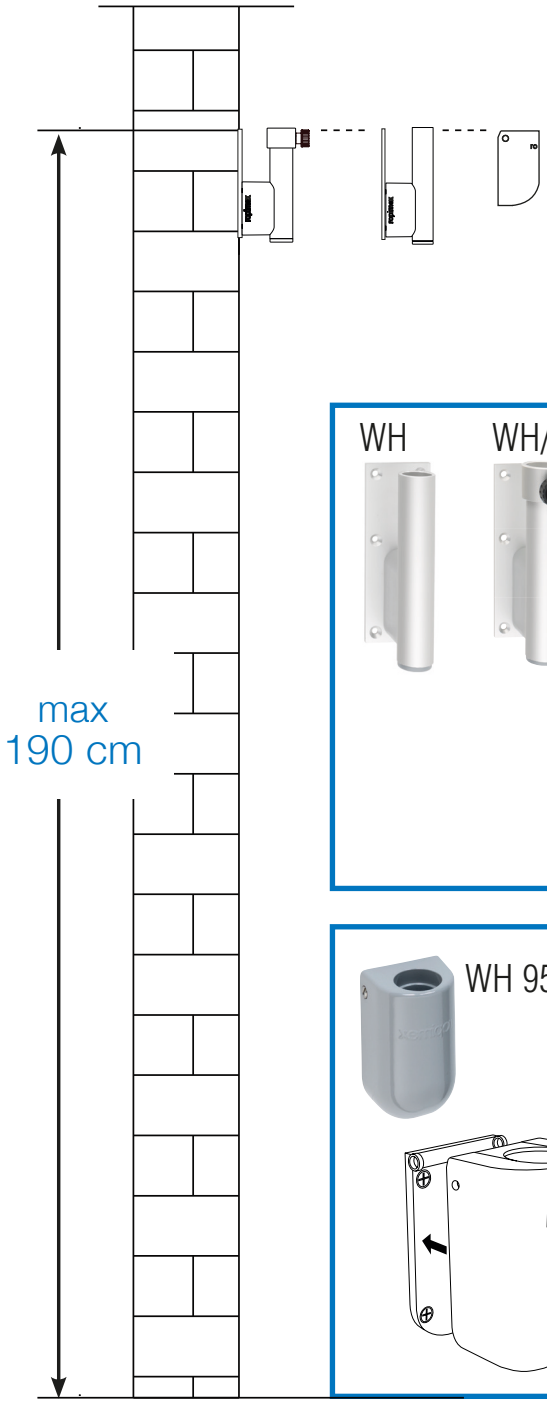

WH / WH/F

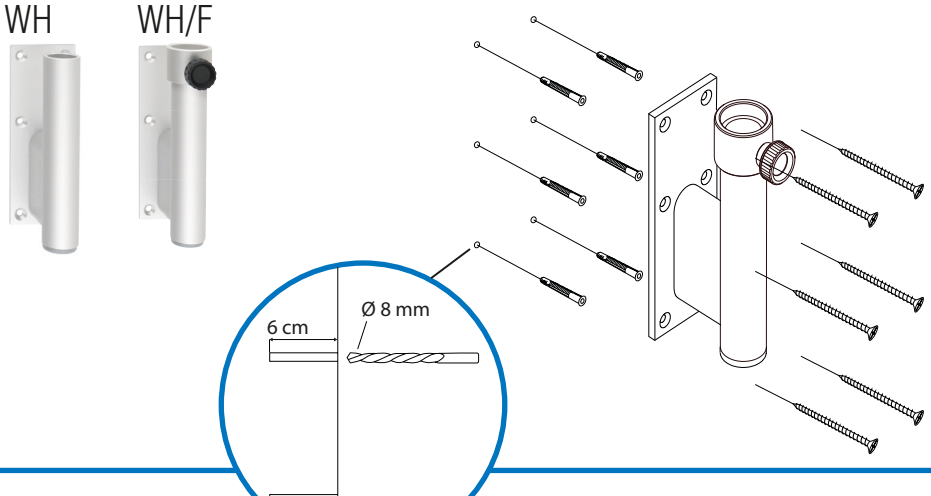
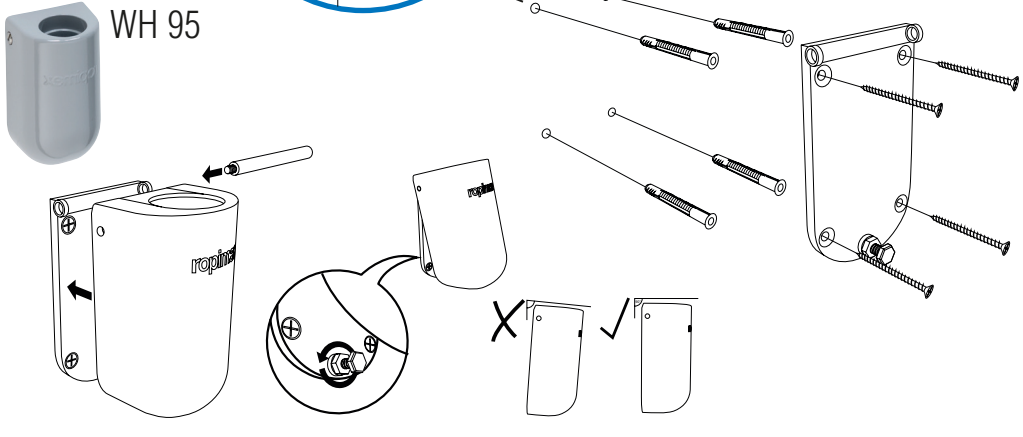
WH 95