RKLE / RKAE Teleskopkabine | Cabines télescopique | Telescopic screen cubicles

Montageanleitung | Instructions de montage | Installation instructions

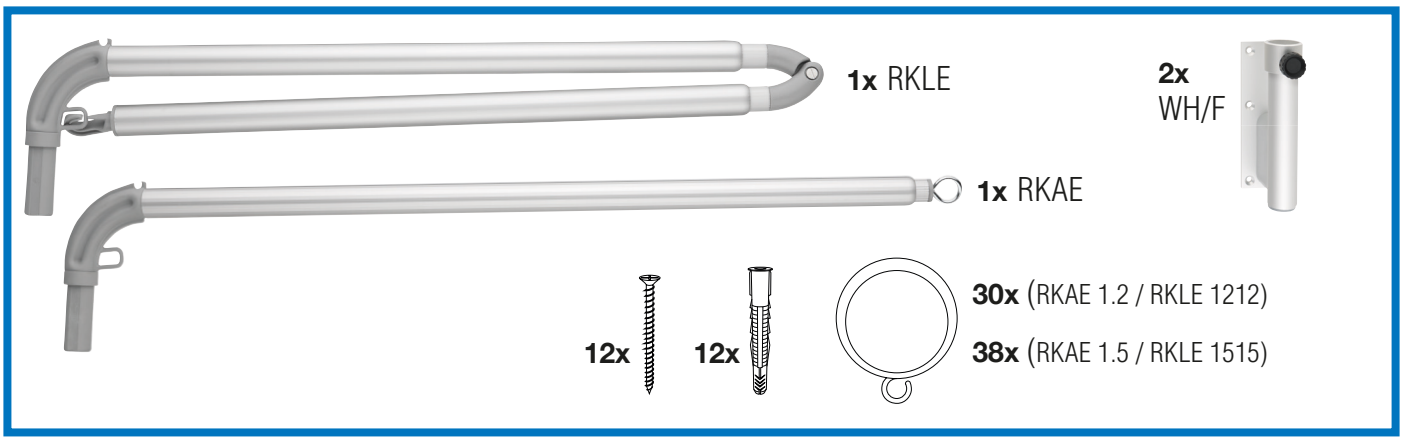

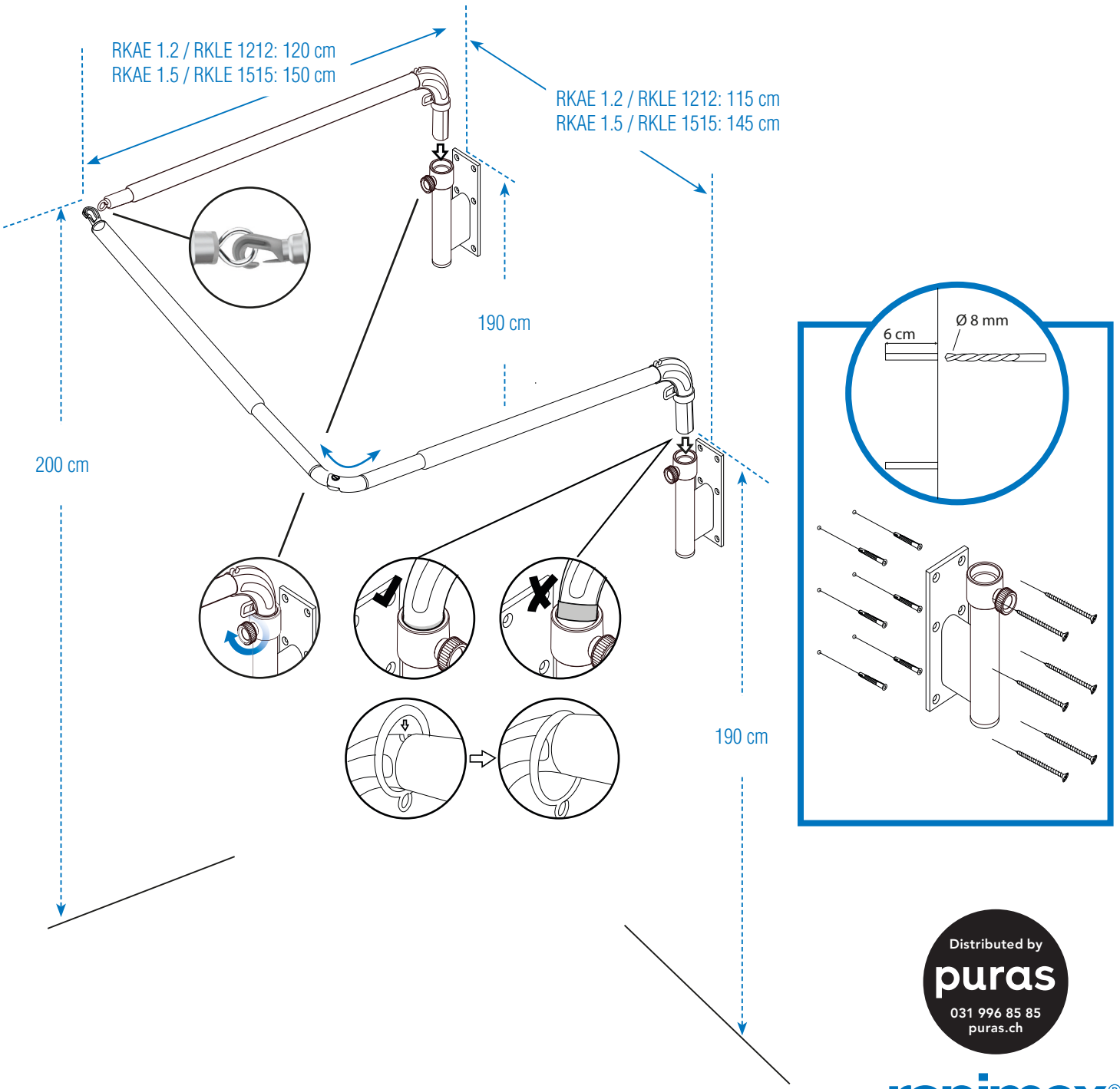

Distributed by puras
031 996 85 85
puras.ch

ropimex®

RKAE Teleskop | Bras télescopique | Telescopic screen

Distributed by
puras
031 996 85 85
puras.ch

Montageanleitung | Instructions de montage | Installation instructions

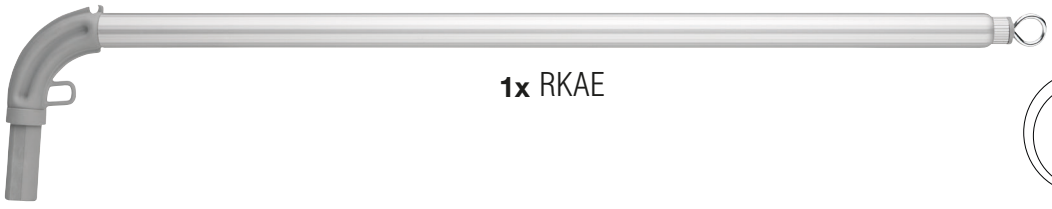

1x RKAE

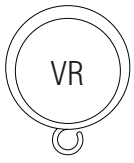

10x (RKAE 1.2)

13x (RKAE 1.5)

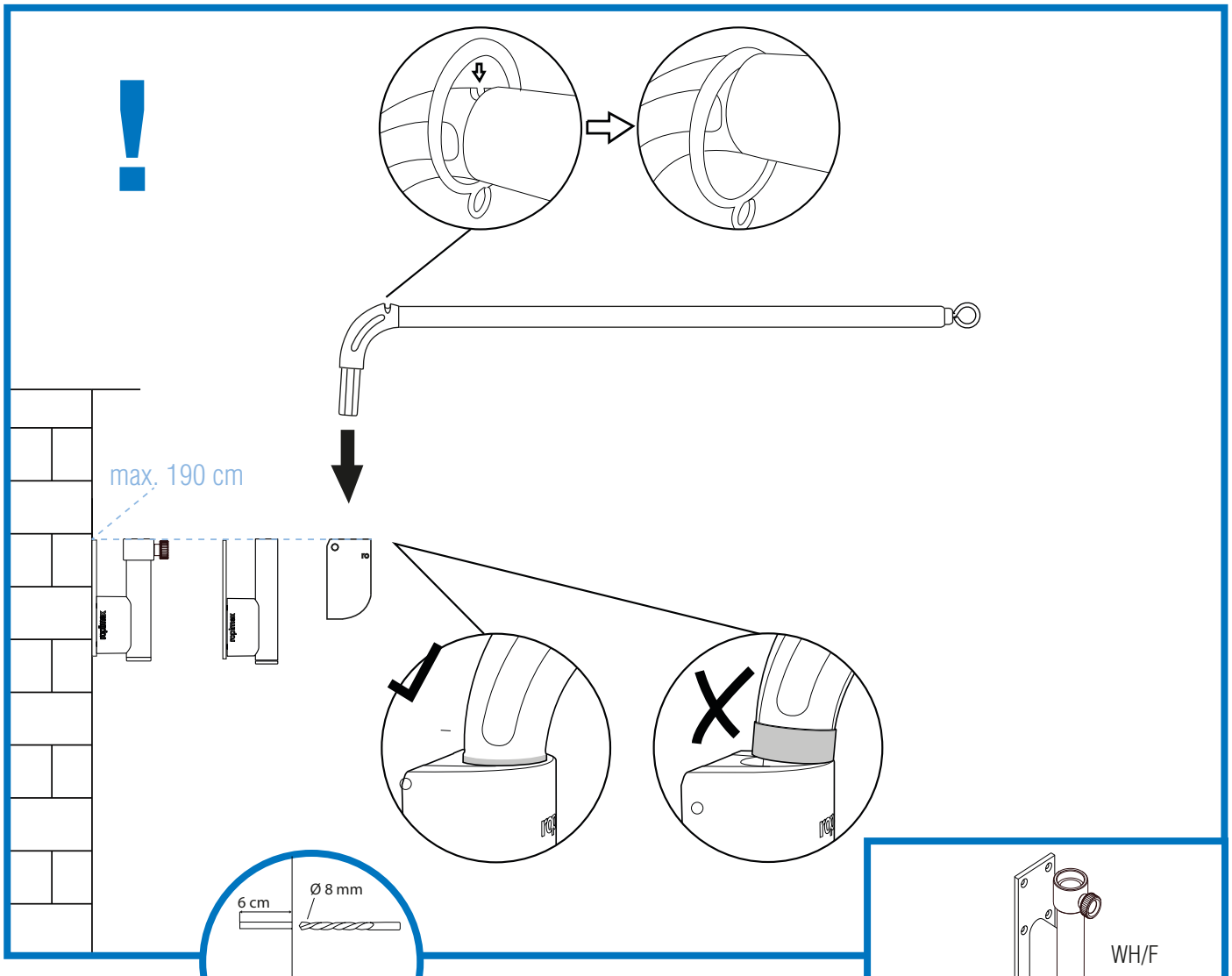

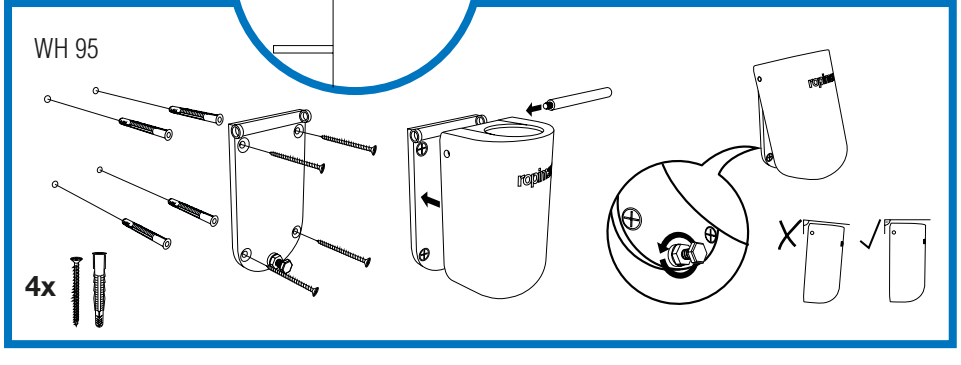

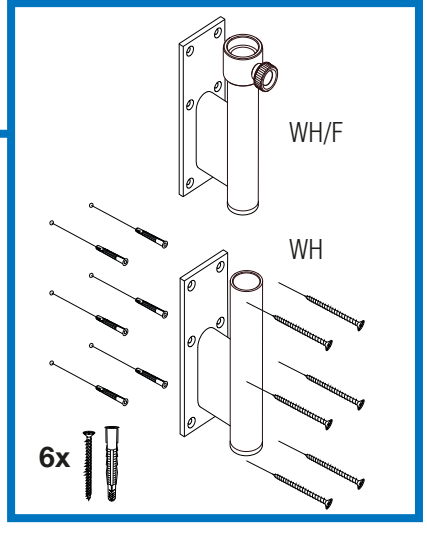

ropimex®